CABALLETE TRASERO PARA BASCULANTE MONOBRAZO SIN EJE
REAR STAND FOR SINGLE SWING ARM WITHOUT AXIS

REF. 5332N

MOUNTING INSTRUCTIONS

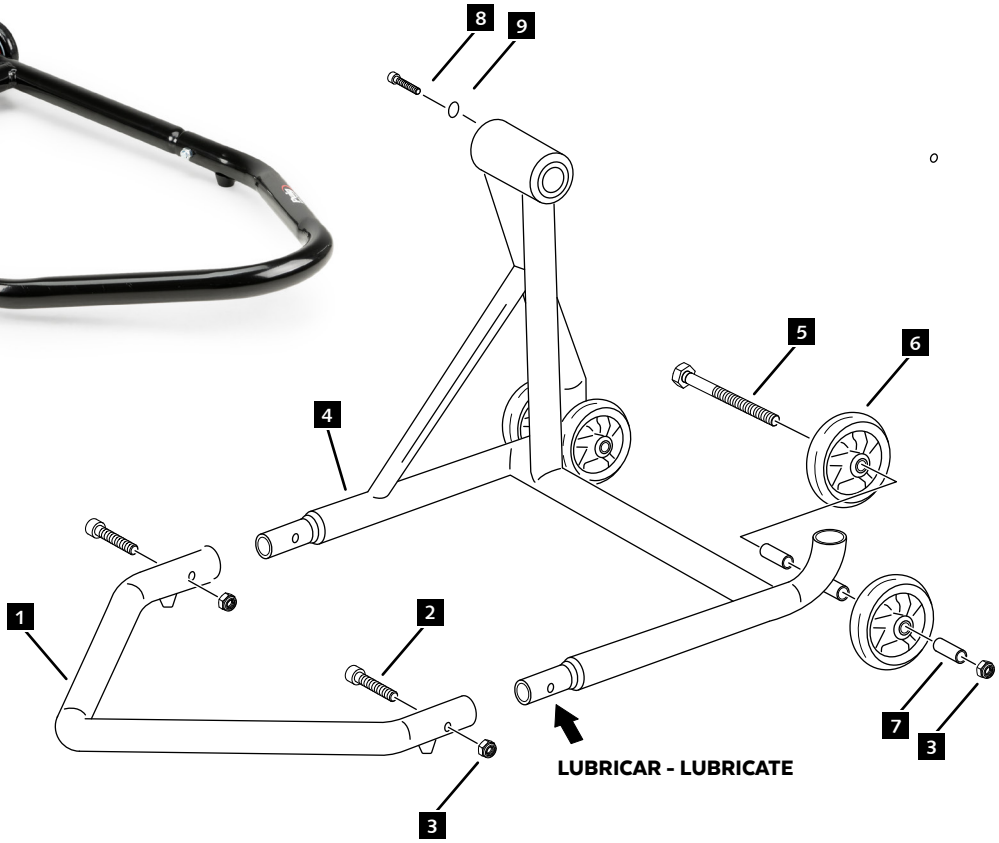

ID.	DESCRIPCIÓN	DESCRIPTION	QTY.
1	Soporte superior	Top support	1
2	Tornillo M8x40	M8x40 screw	2
3	Tuerca M8	M8 nut	4
4	Soporte inferior	Bottom support	1
5	Tornillo M8x105	M8x105 screw	2
6	Rueda	Wheel	4
7	Casquillo 27,5mm Ø8xØ10mm	27,5mm Ø8xØ10mm spacer	4
8	Tornillo M8x16 (Se sirve con el eje)	Screw M8x16 (Delivered with the axis)	1
9	Arandela (Se sirve con el eje)	Gasket (Delivered with the axis)	1

Created by: www.rrdisseny.cat

EJES DE LOS CABALLETES MONOBRAZO
AXIS OF STANDS SINGLE SWING ARM

MOUNTING INSTRUCTIONS

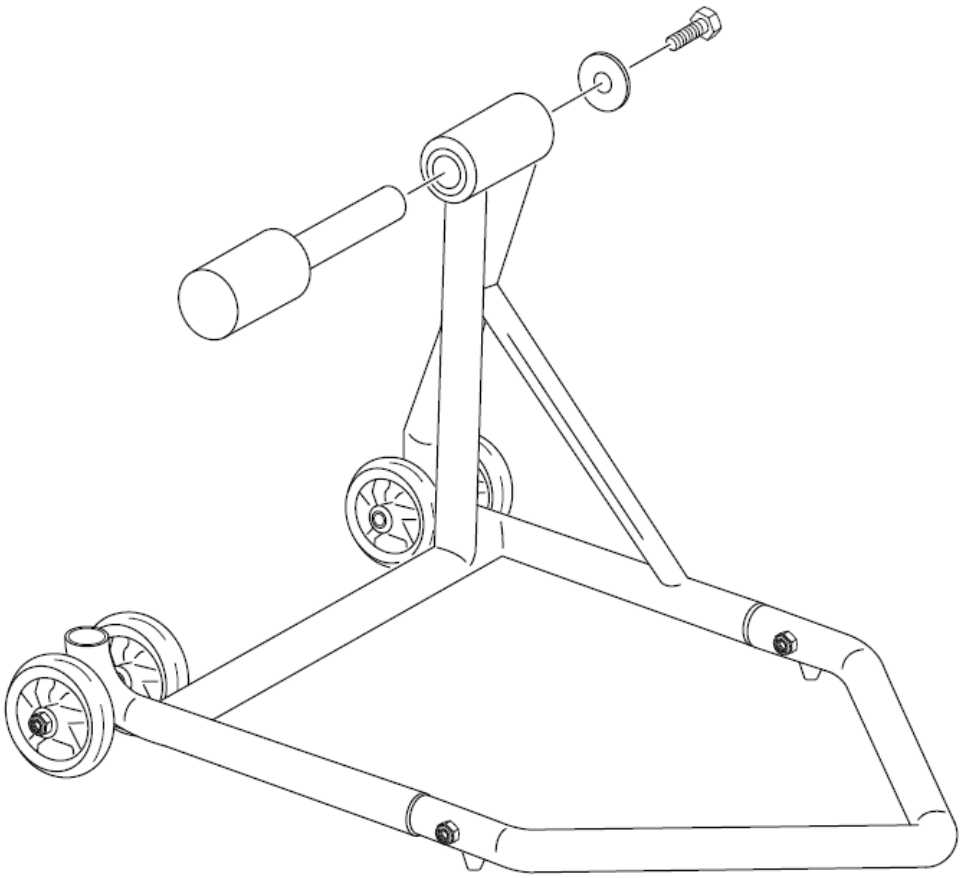

	MARCA/BRAND	DIAMETRO/DIAMETER	REF.
1	BMW	53MM	5518D
2	BMW	30.5MM	5557D
3	DUCATI	21.5MM	5513D
4	DUCATI	38.5MM	5897D
5	DUCATI	40.7MM	5517D
6	MV GUSTA	40.7MM	5517D
7	MV GUSTA	42.5MM	7479D
8	HONDA	28.4MM	5515D
9	TRIUMPH	27.4MM	5616D
10	KTM	27.4MM	5516D